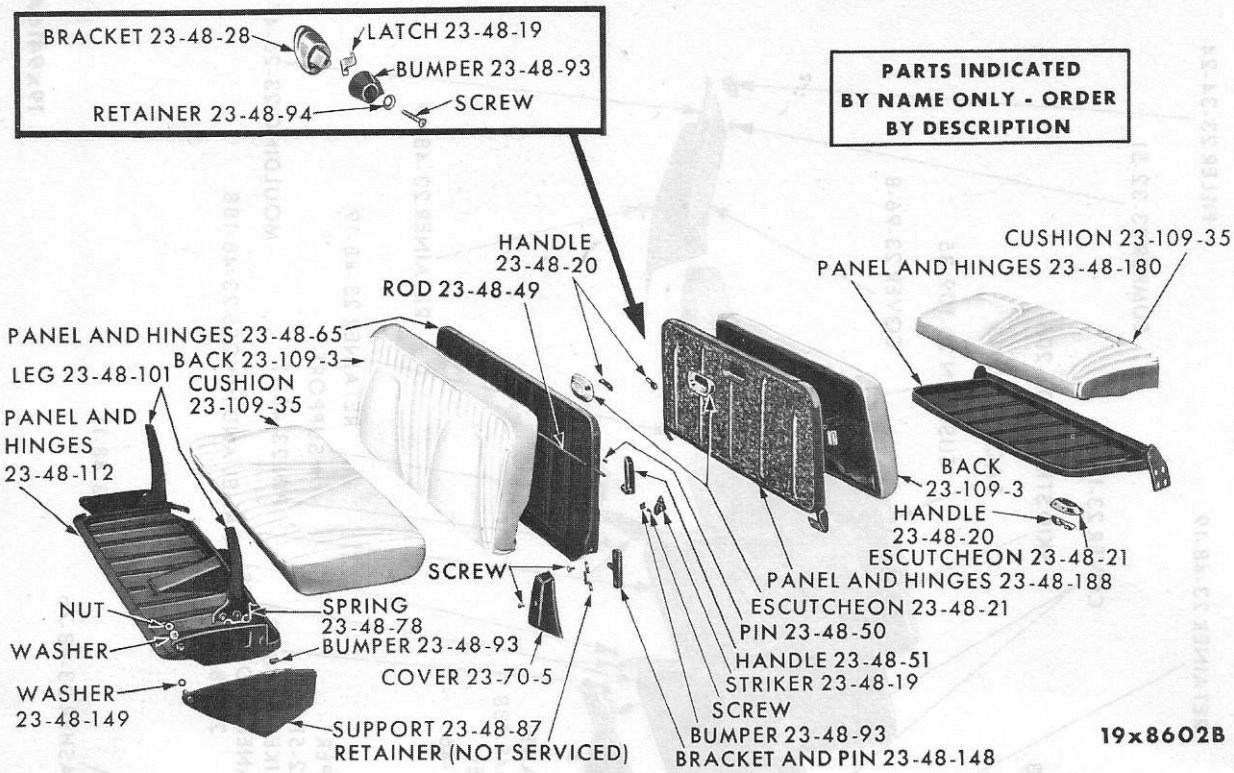

SUBURBAN SEATS - CHRYSLER SC1-2-3

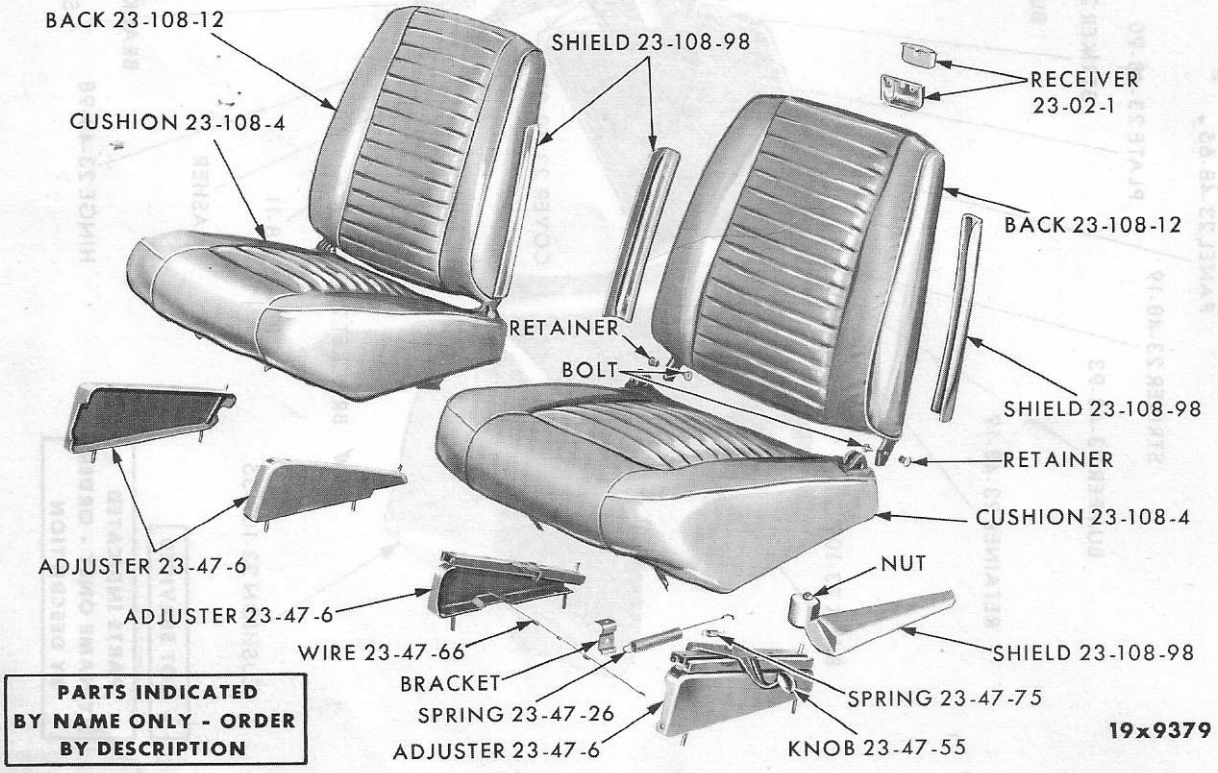

SEATS - VALIANT SV1 AND LANCER SL1